ICD

CATALOGUE 2026

PREMIUM SHADOW GAP PROFILES FROM ITALY

Elevate your interiors with clean architectural lines and timeless design.

Replace traditional skirting boards with a seamless concealed skirting solution that combines elegance and functionality.

for designers | for architects | for retailers | for consumers

Model IC-25DB

Art. 10025

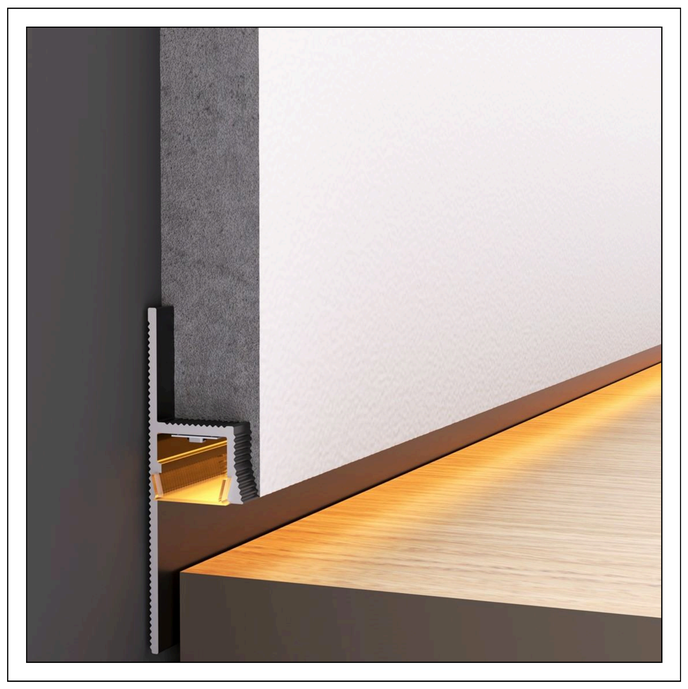

the perfect solution for illuminated shadow gaps

The aluminium shadow gap profile is designed for seamless LED strip integration, creating a continuous, recessed glow that enhances the depth and character of interior spaces. Its subtle, indirect illumination adds a warm, sophisticated architectural effect while creating a modern and elegant atmosphere.

Easy to install, it is compatible with standard LED strips up to 10 mm wide.

- light diffuser is not included

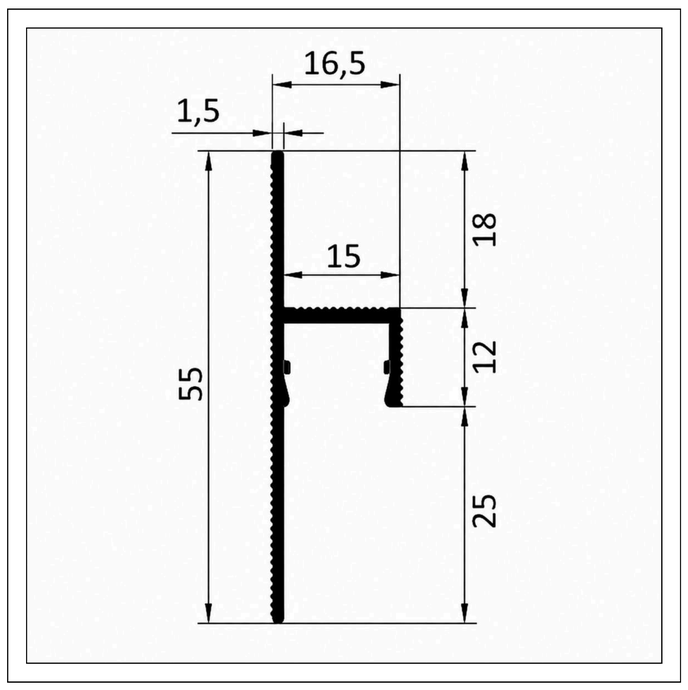

23.99 €

per meter | VAT included

for masonry | for drywall | black





SEAMLESS ELEGANCE

For Aesthetics, Functionality and Harmony

Model IC-20D

Art. 10020



floor shadow gap for precise architectural finishing

The IC-20D shadow gap profile provides a sleek, seamless transition between the wall and floor, complementing the clean, contemporary character of modern interiors. Its precise recessed edge creates a subtle floating-wall effect while giving the floor a crisp, sophisticated finish.

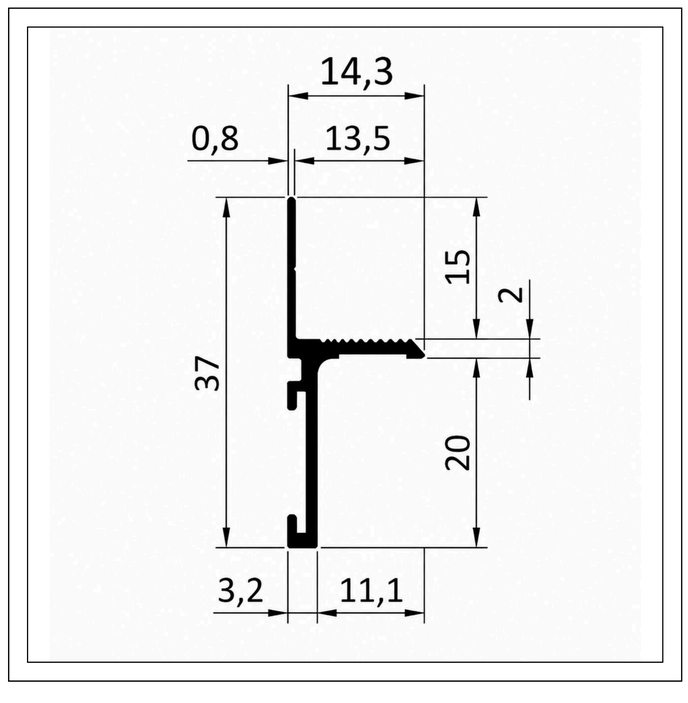

19.99 €

per meter | VAT included

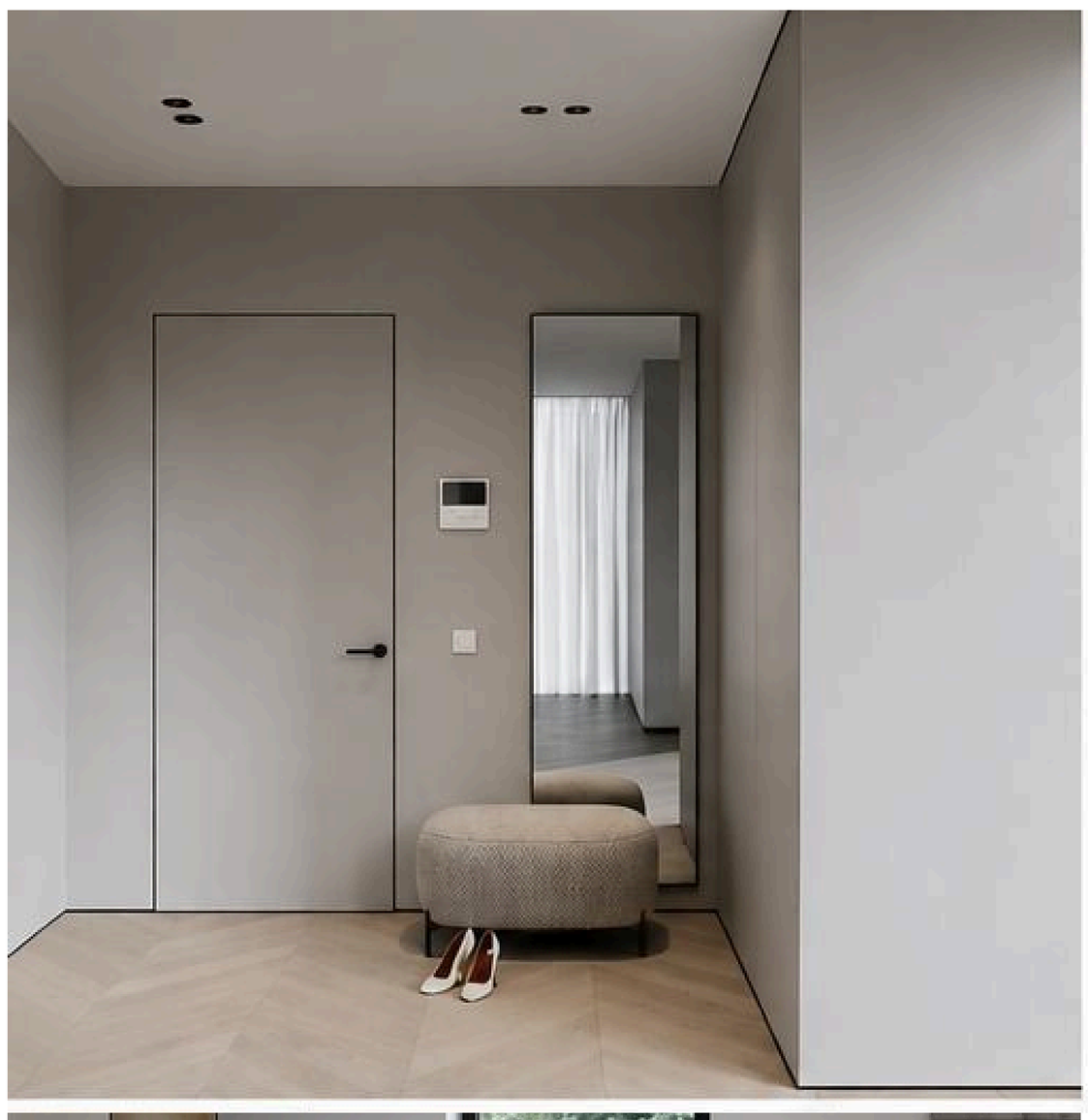

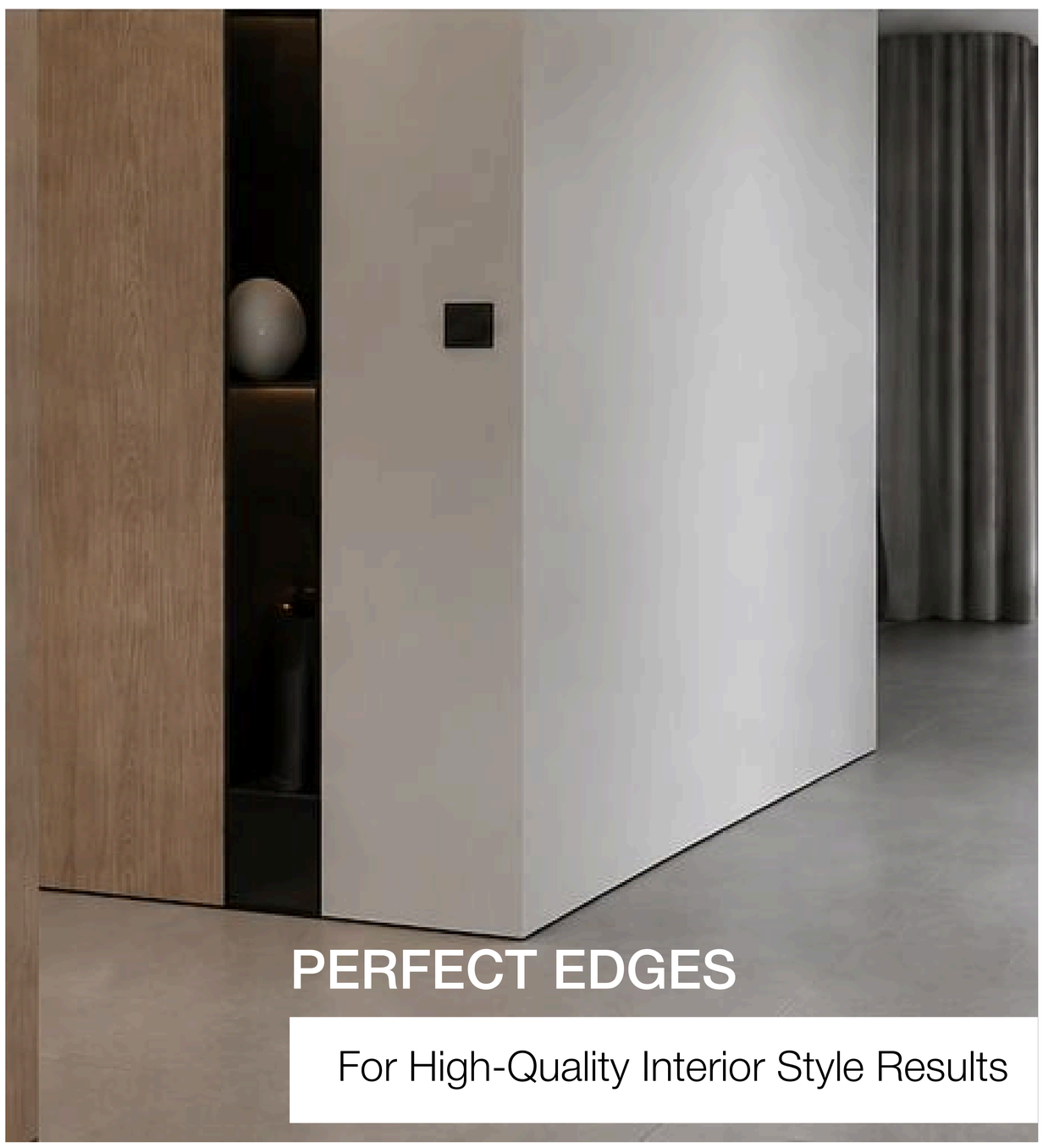



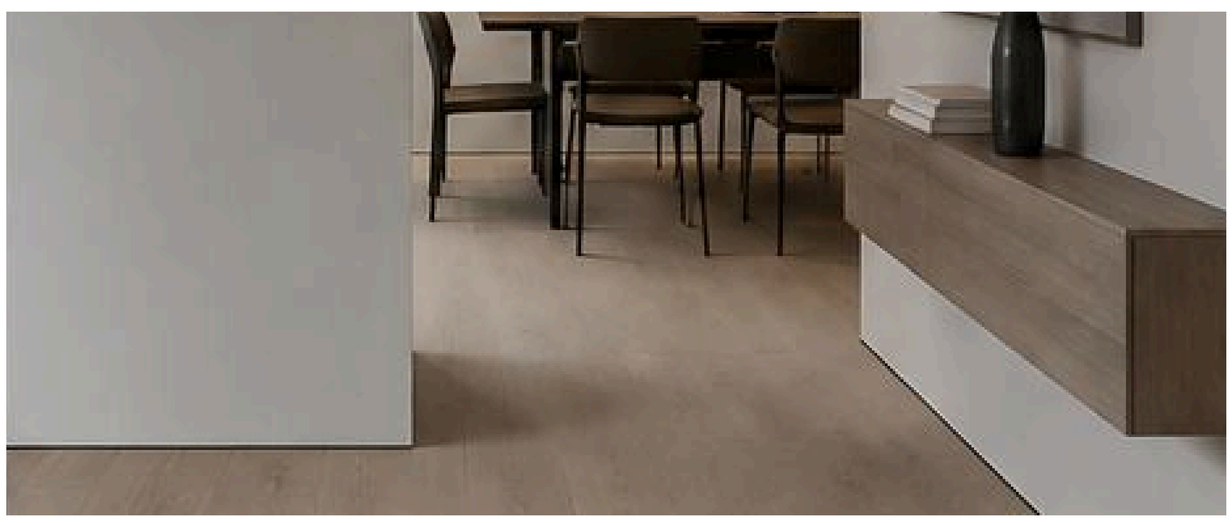

Model IC-S22D

Art. 10022

subtle shadow gap with architectural effect

The IC-S22D shadow gap profile provides a sleek, seamless transition between the floor and wall, complementing the clean aesthetics of contemporary interiors. Its precise recessed edge creates a subtle floating-wall effect while giving the floor a crisp, refined and well-defined finish.



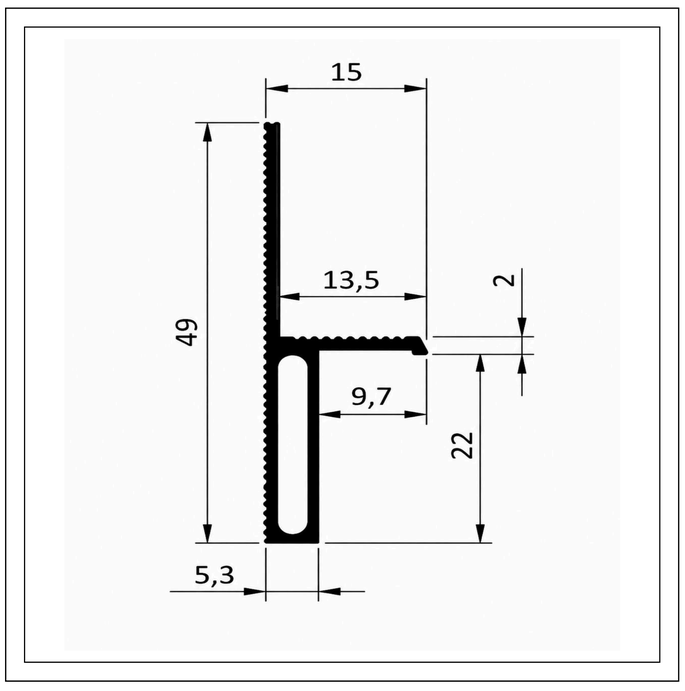

24.99 €

per meter | VAT included

for masonry | for drywall | aluminium

Model IC-S45ASR

Art. 10045ASR

for drywall 15 mm thickness

Ourl IC-S45ASR aluminum shadow gap profile is specifically designed for drywall applications using 15 mm gypsum board. Each profile is supplied with a protective foil to help prevent damage during installation and finishing.



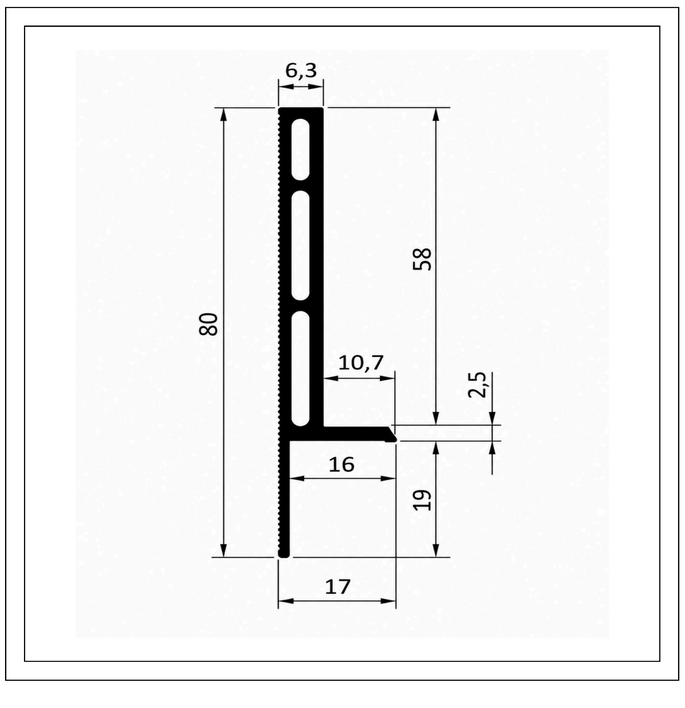

27.99 €

per meter | VAT included

for masonry | for drywall | aluminium

Model IC-DA

Art. 10024

the perfect solution for illuminated shadow gaps for ceilings

The aluminium ceiling shadow gap profile is suitable for LED strips installation. It creates a continuous illuminated recess along the ceiling – adding depth, elegance and a distinctive architectural accent to any room. An LED strip provides soft, indirect lighting that brings warmth and style to interior spaces.
The profile is quick and easy to install and is compatible with all standard LED strips of max. 10 mm wide.



- light diffuser is not included

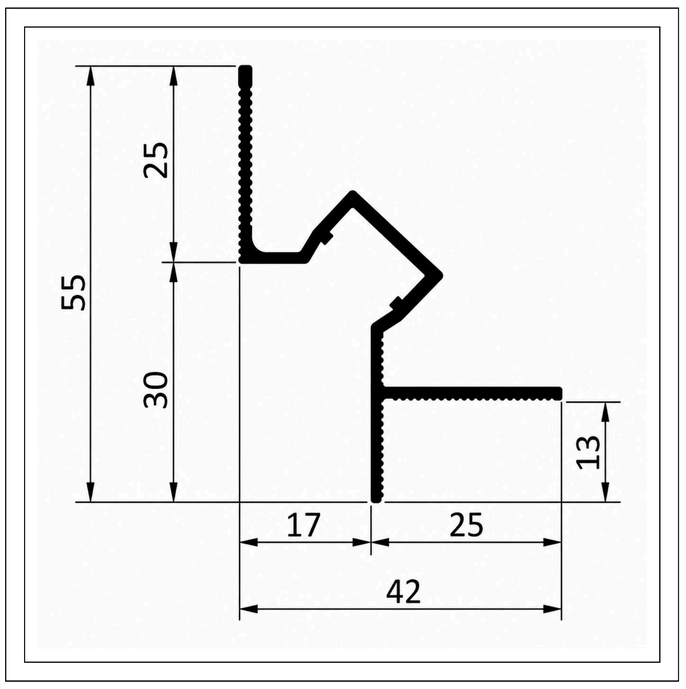

29.99 €

per meter | VAT included

for masonry | for drywall | black anodized

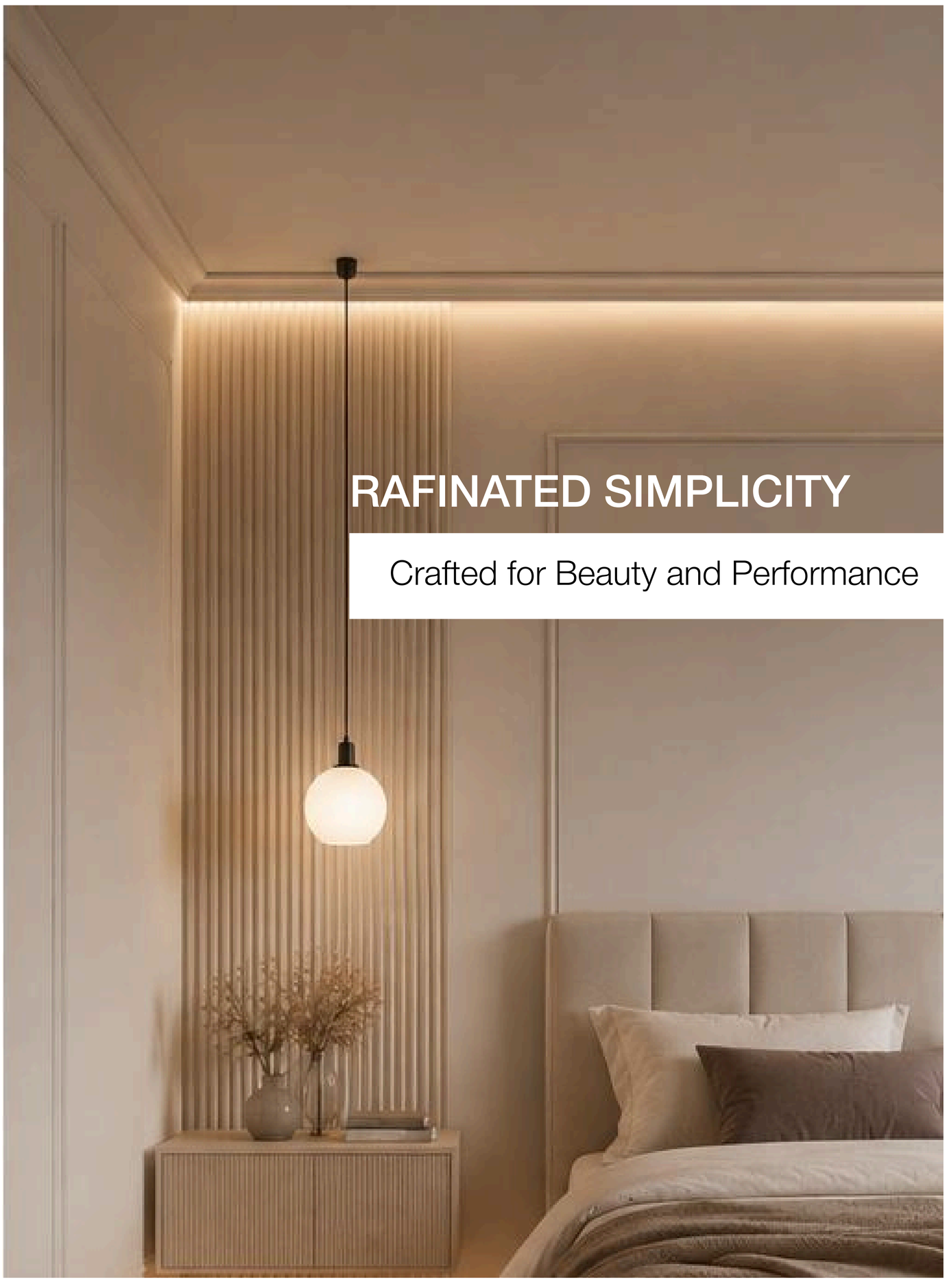





Model IC-T33

Art. T33

next generation of shadow ceiling gap

Designed for contemporary interiors, this aluminium shadow gap profile creates a clean, elegant separation between tiled surfaces while allowing for natural movement and expansion.

Perfect for bathrooms, wellness areas, kitchens, and other premium tiled spaces, it combines refined aesthetics with long-lasting performance. The profile enables designers to achieve seamless, high-end finishes without compromising functionality.



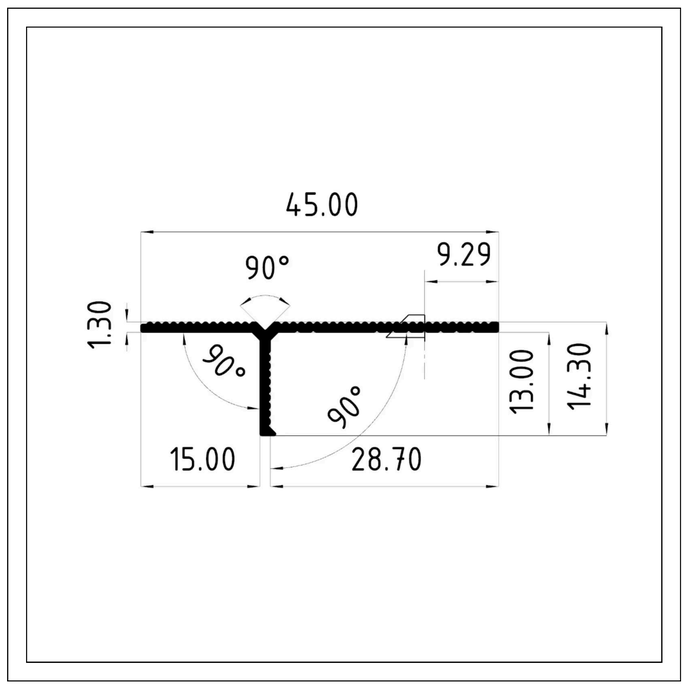

for drywall | black finish

19.99 €

per meter | VAT included





Model IC-T61

Art. T61

ultra slim deisign for walls

Designed for contemporary interiors, this aluminium shadow gap profile creates a clean, elegant separation between tiled surfaces while allowing for natural movement and expansion.

Perfect for bathrooms, wellness areas, kitchens, and other premium tiled spaces, it combines refined aesthetics with long-lasting performance. The profile enables designers to achieve seamless, high-end finishes without compromising functionality.

22.99 €

per meter | VAT included

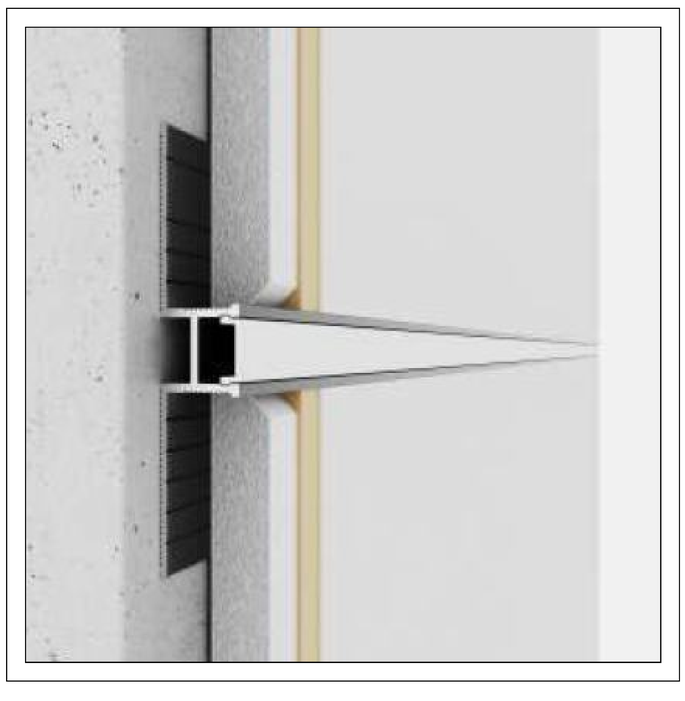

- light diffuser is included

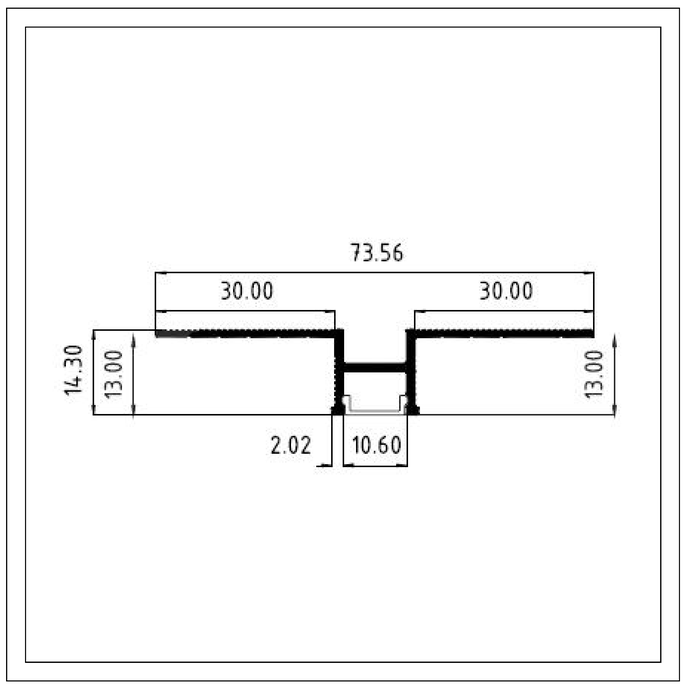

for drywall | black finish



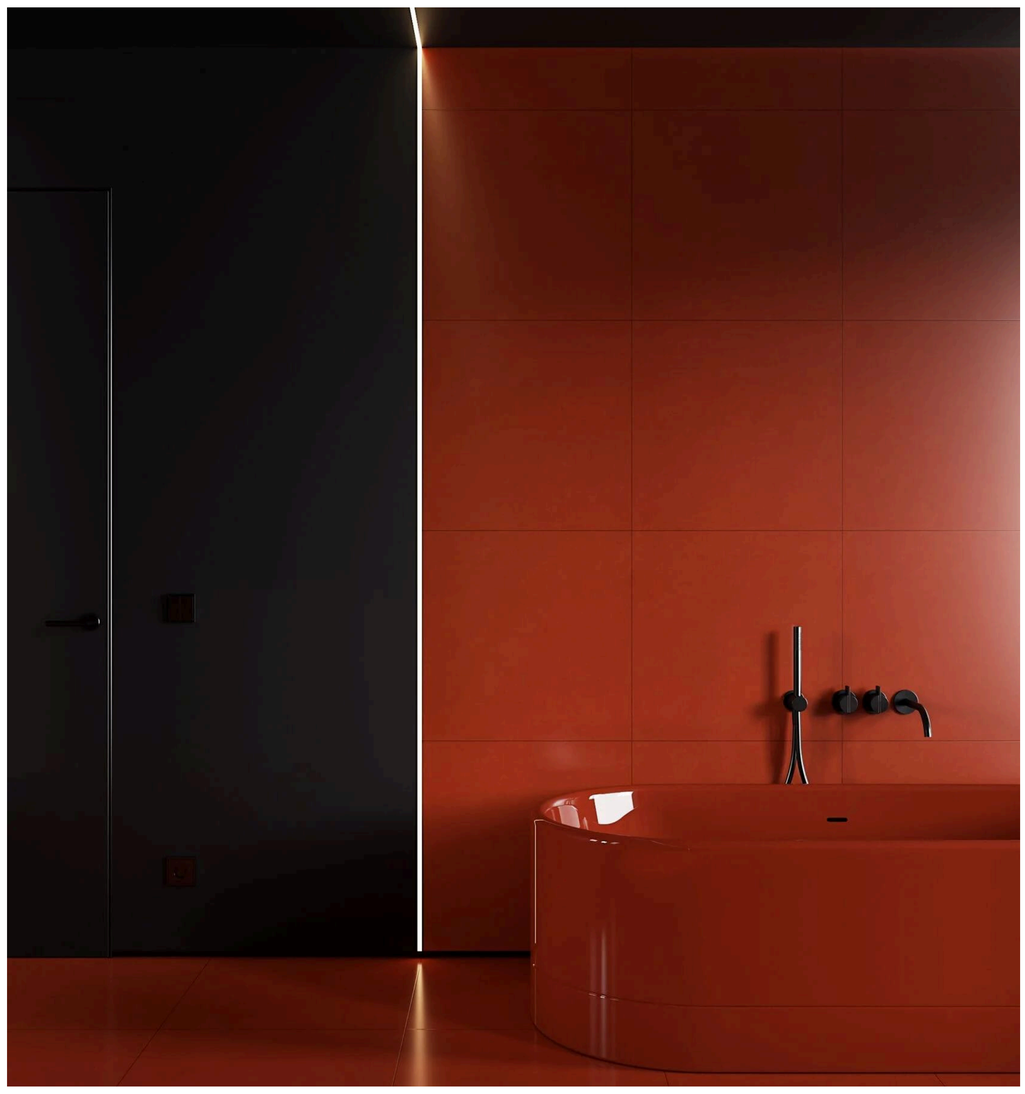



Model IC-T62

Art. T62



ultra slim deisign for walls

Designed to create elegant shadow joints between wall panels, this aluminium profile adds depth, precision, and a refined architectural finish to contemporary interiors. Its recessed design enhances clean, minimalist aesthetics while creating a seamless transition between timber, decorative panels, or other cladding materials.

Ideal for residential and commercial projects, it delivers a premium appearance with durable performance and precise installation.

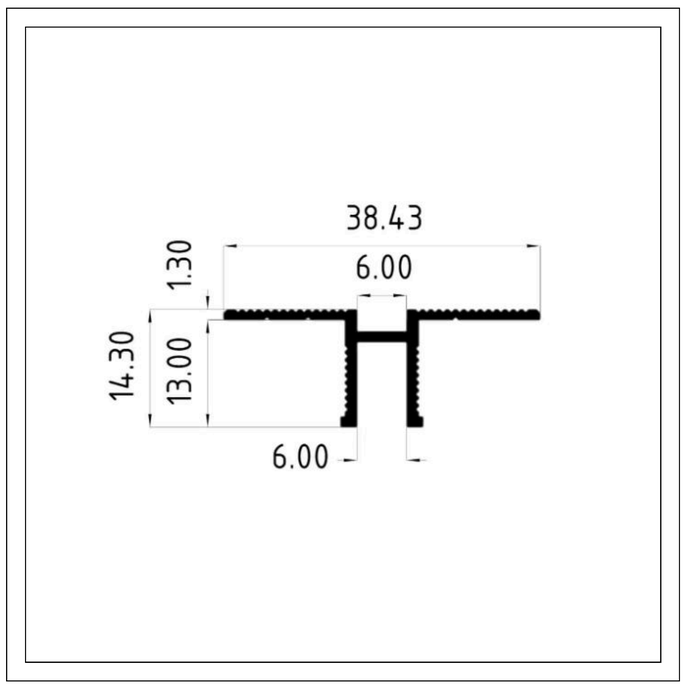

for drywall | black finish

22.99 €

per meter | VAT included



ANOTHER LEVEL

Seamless Architectural Detail



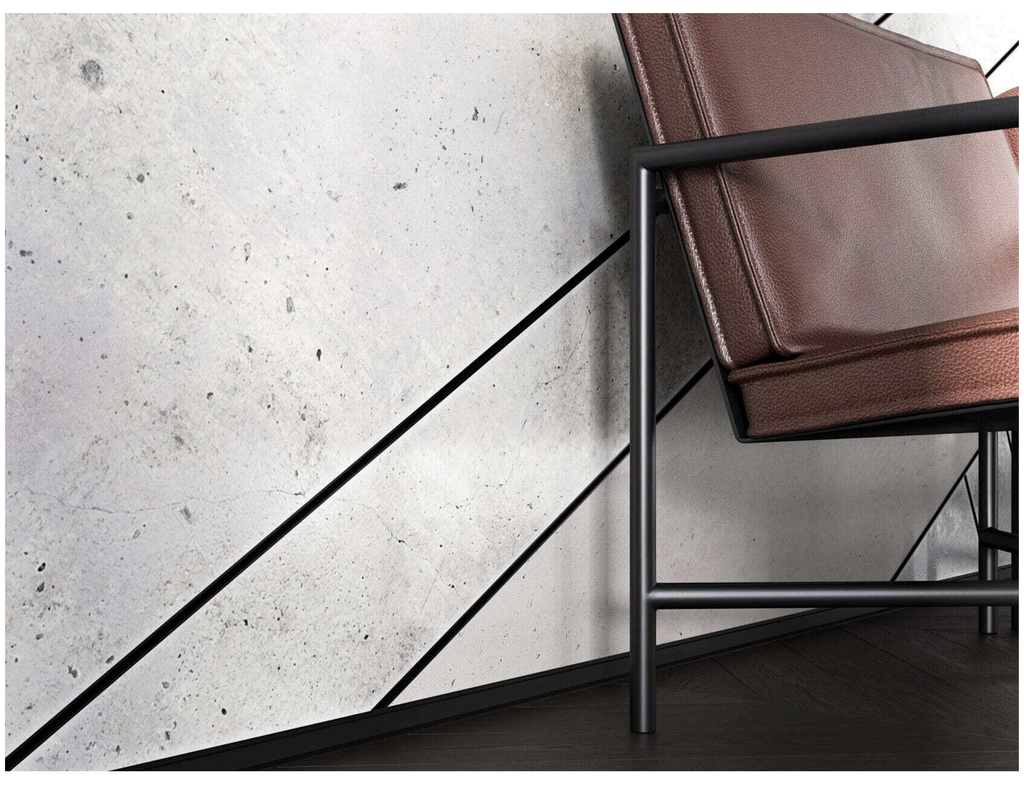

ICD

PREMIUM
CONCEALED
SKIRTING
FROM ITALY

for designers | for architects | for retailers | for consumers

Aluminium profile for wooden skirting boards

The LG46M LG46D, LG60M, LG60D and LG80M models are specially designed for a clean and discreet installation of wooden skirting boards. All of them are concealed, wall-flush design creates a seamless transition between the wall and skirting, preserving the natural look of the interior.

The pre-drilled profile allows for quick and precise installation and is suitable for both solid walls and drywall constructions. It provides a stable base while keeping all fixing elements hidden for a refined, minimalist finish.

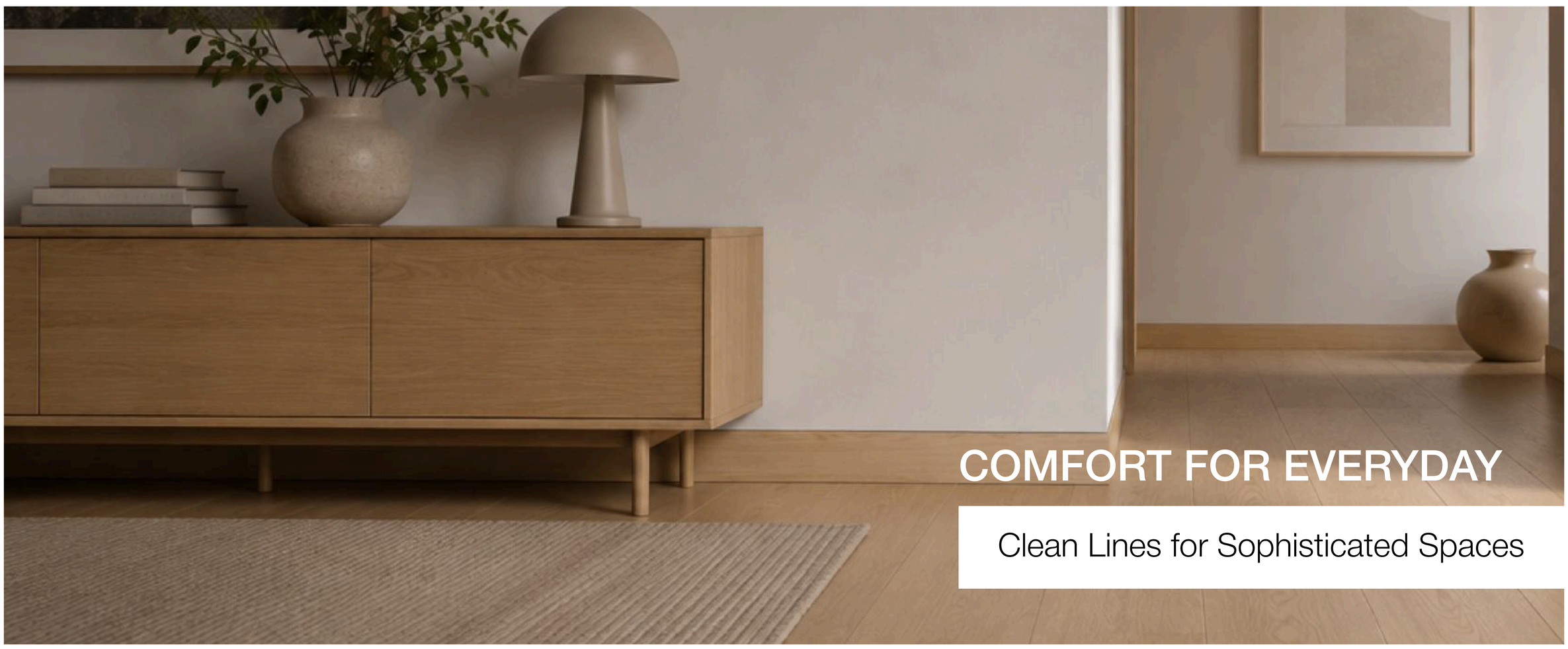





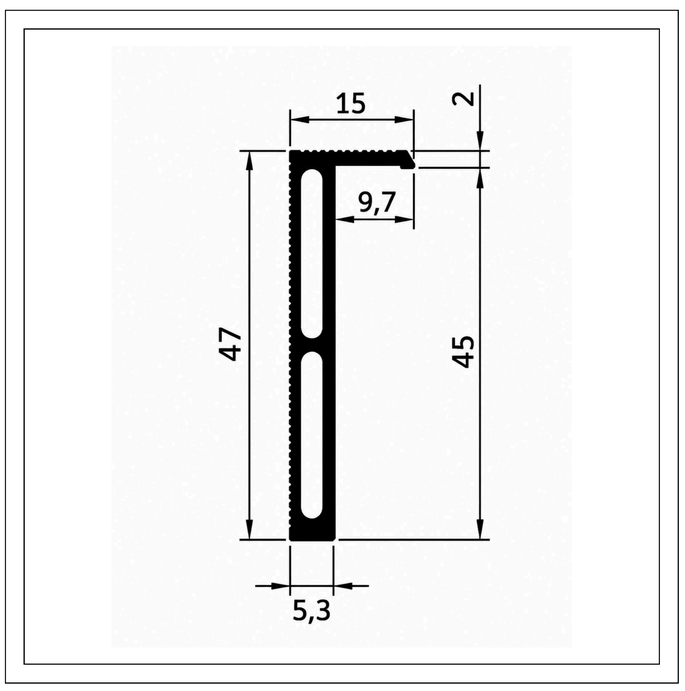

Model IC-L46M

Art. 10046

Height of skirting boards: 35 up to 50 mm

Finish surface: aluminium

Mounting: for mansory

24.99 €

per meter | VAT included

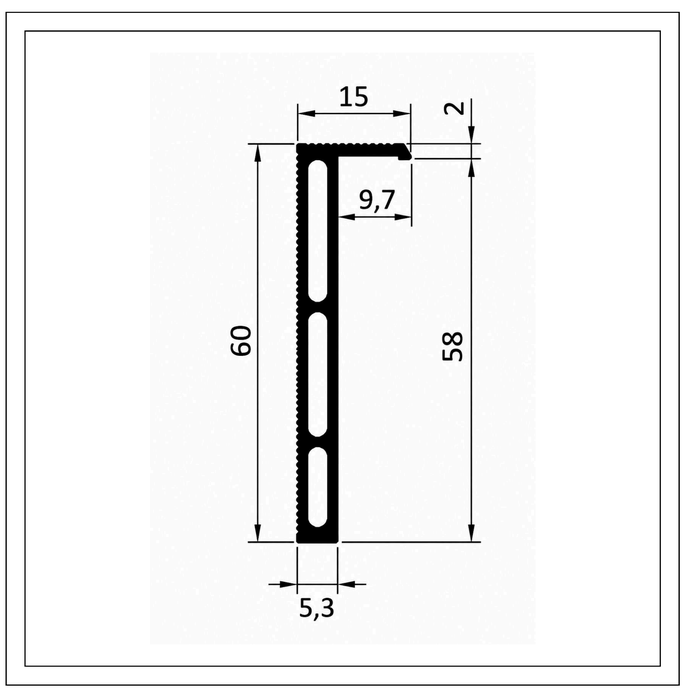

Model IC-L60M

Art. 10061

Height of skirting boards: 50 up to 90 mm

Finish surface: aluminium

Mounting: for mansory

25.99 €

per meter | VAT included

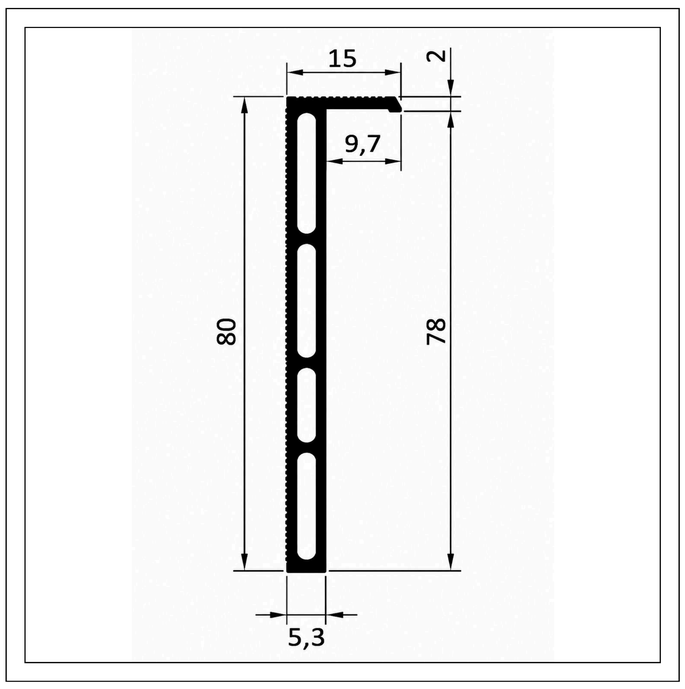

Model IC-L80M

Art. 10080

Height of skirting boards: 80 up to 120 mm

Finish surface: aluminium

Mounting: for mansory

29.99 €

per meter | VAT included

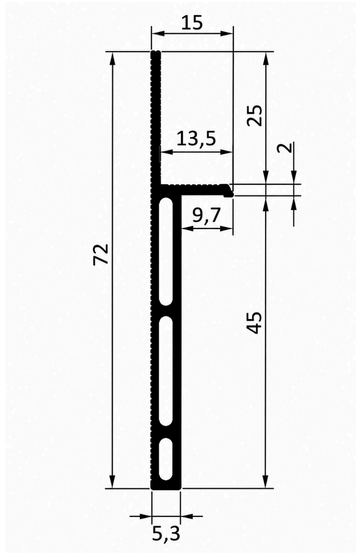

Model IC-L46D

Art. 10045

Height of skirting boards: 35 up to 50 mm

Finish surface: aluminium

Mounting: for drywall

24.99 €

per meter | VAT included

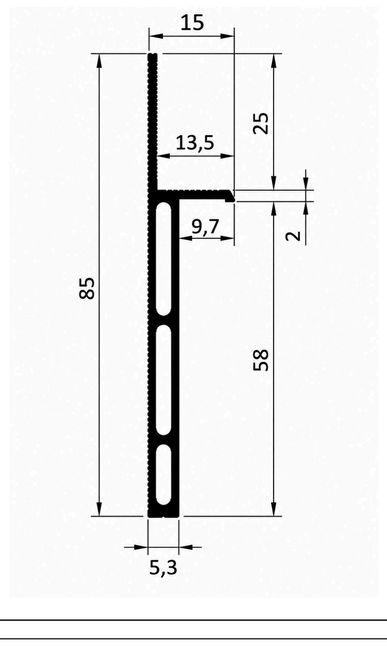

Model IC-L60D

Art. 10060

Height of skirting boards: 50 up to 90 mm

Finish surface: aluminium

Mounting: for drywall

25.99 €

per meter | VAT included

Model IC-C70

Art. 10170

for a timeless room design

The IC-C70 profiles bring a clean, flush finish to bathrooms, kitchens and living spaces, offering a seamless solution for modern and elegant interiors.

Designed for durability and effortless integration, they work with 12 mm tiles, natural stone and ceramic surfaces, providing a refined look with no visual limitations.



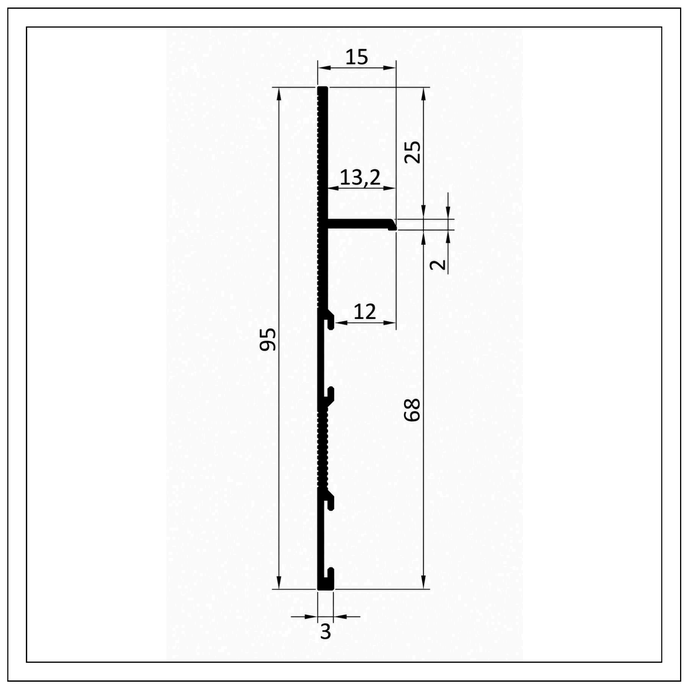

for drywall | aluminium finish

22.99 €

per meter | VAT included

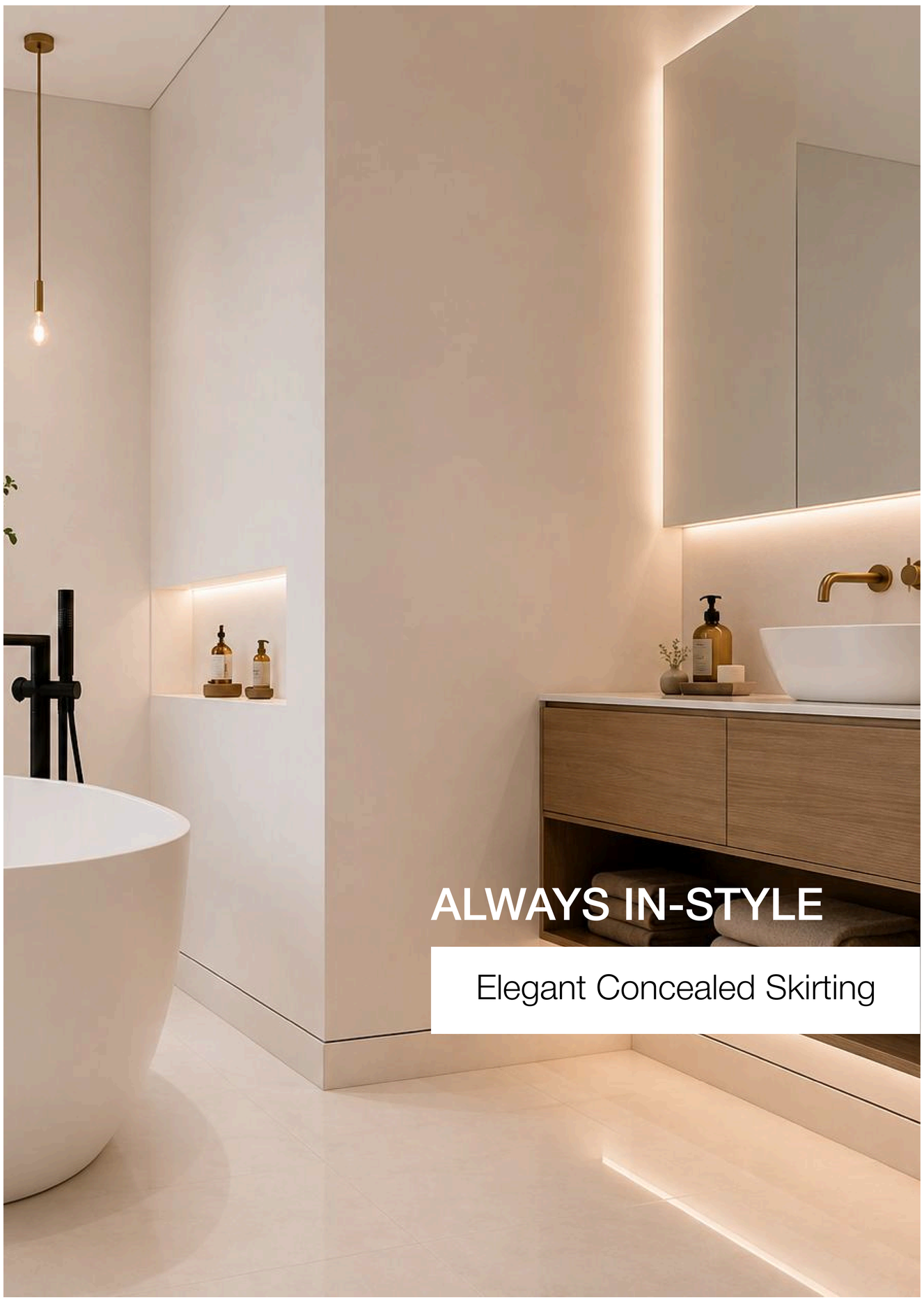

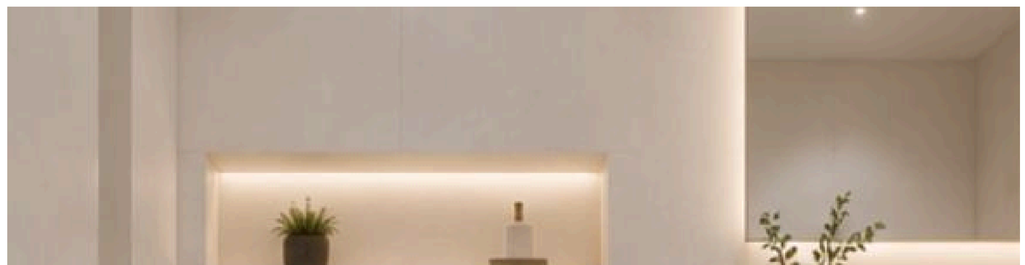



ALWAYS IN-STYLE

Elegant Concealed Skirting

ICD

ICD delivers innovative architectural profiles and finishing solutions that transform contemporary interior spaces with precision and elegance. We collaborate with architects, interior designers, and construction professionals to provide products that combine minimalist aesthetics, flawless functionality, and lasting quality. From concealed skirting systems and shadow gap profiles to bespoke architectural details, every solution is engineered to achieve clean lines and seamless integration. Our commitment to innovation and craftsmanship helps design professionals bring their creative visions to life with confidence. At ICD, we believe that exceptional interiors are defined by the details.

CONTACTS

info@icd.lt
00 370 679 26693
www.icd.lt